Changing & Showering

seating • standing • toileting • bathing
changing • showering
desks • tables • sleeping • therapy
sensory • moving • handling

smirthwaite

Together we
transform lives

welcome

Since 1986, Smirthwaite has developed and retained its reputation as one of the leading designers & manufacturers of special needs equipment. In that time, we have dedicated ourselves to finding and providing effective solutions that offer significant benefits to babies, children and young adults in their daily lives. Working closely with children, parents, carers and therapists, we have developed a comprehensive range of seating, standing, tables, desks, toileting, bathing, changing, showering, moving & handling, sleeping, therapy and sensory products.

Changing & Showering

Our range of disabled changing tables and showering products help users become more independent.

They're also designed to give carers confidence while working with the user.

We've taken great care to create a range of products that will help make your life simpler. For example, some of our disabled changing tables are mobile and need no installation.

We have products that are suitable for wet and dry conditions and for all budgets.

Many of the products can be set to a safe and suitable working height to reduce the risk of back injury to the carer. This also applies to our wall mounted products.

Our changing and showering products are suitable for both children and adults. Plus, we offer a fitment service and various service plans to keep your products in tip-top condition.

We are proud to support the Changing Places campaign to make toilet facilities accessible for people with additional needs.

Innovation in our design

Special needs equipment is often overly complex, difficult to use and expensive to maintain. At Smirthwaite, we believe in well-made, easy to use products that stand the test of time. Through close consultation with leading therapists, parents and end users, we ensure our designs offer numerous clinical benefits whilst maintaining a customer-centric and innovative approach.

Warranty & servicing

All of our products come with a two year warranty as standard. An inspection, maintenance, service and repair facility for all Smirthwaite products is available to you, for complete peace of mind. This can be scheduled at a time that is convenient for you.

Call our Customer Services team today on +44 (0)1626 835552 or e-mail info@smirthwaite.co.uk to book your service, inspection or repair.

Easy to clean

All of our products are easy to clean. For instance, our wooden chairs have anti-microbial properties that ensure surfaces are kept hygienic. This helps to reduce any risk of cross infection and is especially useful in multi-user environments such as nurseries and schools.

All our upholstery is carefully chosen due to its clever material make up that contains antibacterial agents that help against the spread of MRSA, E coli and other bacteria.

contents

changing & showering

easi-lift changing bench 4
easi-lift shower stretcher 6
shower stretcher fixed height 8
shower stretcher adjustable 10
hi-riser 12
hi-riser shower stretcher 14
mobi stretcher 16
mobi heavy duty changer 18
mobi shower trolley 20
accessories 22
colours 24

easi-lift changing bench

No floor fixing

Most height-adjustable changing tables require fitting to both the wall and floor. The Easi-Lift Changing Bench has been designed to require wall fixing only. This is particularly beneficial where the type of floor, surface pipe work or cabling prevent floor installation.

Reduces back injury

The Easi-Lift Changing Bench has a travel range of 500mm to meet varying needs and the bench can easily be set to a safe and suitable working height to help prevent the risk of back injury to the carer.

Space saving design

Easi-Lift Changing Bench is a compact, electrically operated wall-mounted changing bench designed to fit in a dry room environment where space is at a minimum, folding away to save space after use.

Technical data

- No floor fixing required
- Weight capacity of 150kg
- Travel range of 500mm
- Protrudes 305mm from the wall when stored

easily set to a safe and suitable working height, with a travel range of 500mm to meet varying needs

Standard key features

Electrically operated

Folds away to save space

Stowaway safety rail

Requires wall fixing only

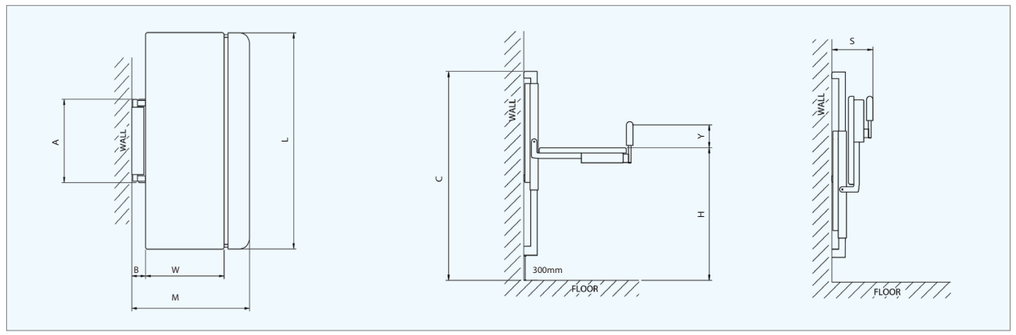

Mild Steel Powder Coated	Size	Table Dimensions			Travel Range	Wall Frame Width	Wall Frame Depth	Wall Frame Height	Safety Side Height	Stored Width	Max User Weight	Product Weight
		L mm	W mm	M mm	H mm	A mm	B mm	C mm	Y mm	S mm	kg	kg
3081	1	1200	550	875	450 - 950*	700	110	1620*	165	305	150	80
3082	2	1300	550	875	450 - 950*	700	110	1620*	165	305	150	82
3083	3	1400	600	925	450 - 950*	700	110	1620*	165	305	150	84
3084	4	1500	600	925	450 - 950*	700	110	1620*	165	305	150	86
3085	5	1600	650	975	450 - 950*	700	110	1620*	165	305	150	88
3086	6	1700	650	975	450 - 950*	700	110	1620*	165	305	150	90
3087	7	2000	650	975	450 - 950*	700	110	1620*	165	305	150	94
3088	8	2100	650	975	450 - 950*	700	110	1620*	165	305	150	96

*dependent on installed height
* Actual product may vary subject to design upgrades
All technical data and drawings available upon request.

Colour Ranges
See page 24 for colour options

easi-lift shower stretcher

Easy adjustment

The Easi-Lift Shower Stretcher has been designed to help you move the user up and down with ease whilst they are on the stretcher. It is electronically operated with a height range of 500mm, which allows a safe and suitable working height to prevent the risk of back injury to the carer.

Contemporary design

The unobtrusive and neutral design of the Easi-Lift Shower Stretcher allows it to fit into a wide range of environments, especially with it's stainless steel and powder coated frame. The need for floor fixing has been eliminated making it the perfect choice for areas where the floor type, surface pipe work or cabling prevent floor installation.

Easy storage

The compact design coupled with the ability to fold the stretcher away when it is not in use makes this the ideal product for times when space is limited.

Technical data

- No floor fixing required
- Weight capacity of 200kg
- Travel range of 500mm

the ideal wet room product for times when space is limited

Picture shows optional 1400mm safety guard

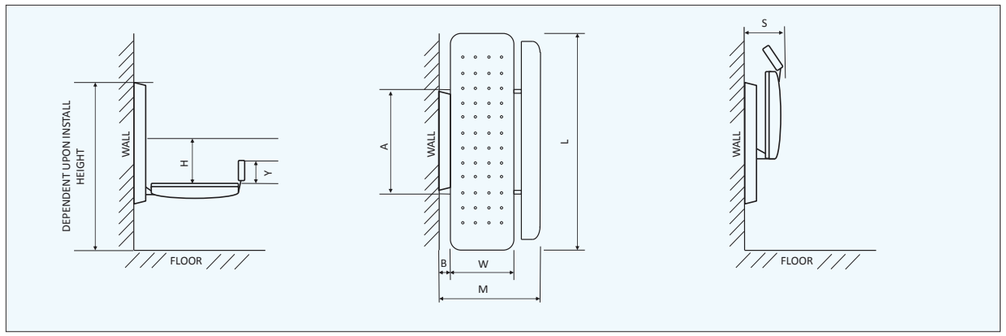

Standard key features

Requires wall fixing only

Stainless steel frame with powder coated finish

Optional integral vinyl headrest

Folds away to save space

Colour

Stainless Steel Powder Coated		Size	Table Dimensions			Travel Range	Wall Frame Width	Wall Frame Depth	Safety Guard Height**	Stored Width	Stored Width inc drip tray**	Max User Weight	Product Weight
Without Head-rest	With Head-rest		L mm	W mm	M mm	H mm	A mm	B mm	Y mm	S mm	S mm	kg	kg
3191	3291	1	1400	650	1000	450 - 950*	750	110	145	270	380	200	82
3192	3292	2	1500	650	1000	450 - 950*	750	110	145	270	380	200	83
3193	3293	3	1600	650	1000	450 - 950*	750	110	145	270	380	200	84
3194	3294	4	1700	650	1000	450 - 950*	750	110	145	270	380	200	85
3195	3295	5	1800	650	1000	450 - 950*	750	110	145	270	380	200	86
3196	3296	6	1900	650	1000	450 - 950*	750	110	145	270	380	200	87

*dependent on installed height **optional accessory
* Actual product may vary subject to design upgrades
Wall frame height 1320mm
All technical data and drawings available on upon request.

shower stretcher fixed height

Economical solution

The Shower Stretcher Fixed Height is our entry-level product and an economical washing and showering solution for the user. This durable and slimline product represents real value for money.

Makes bathing easier

The Shower Stretcher Fixed Height is designed to allow the washing or showering of the user whilst in a horizontal position. It can be fixed directly above a bath making it the perfect solution for the home.

Added headrest

The Shower Stretcher Fixed Height, along with all of our shower stretchers, can be enhanced with the optional integral vinyl headrest. The headrest features a paddle lift adjustment, which allows it to be locked securely into the desired position.

Technical data

- No floor fixing required
- Permanently fixed at the desired height
- Weight capacity of 200kg

economical washing and showering solution with this durable and slimline product

Standard key features

Requires wall fixing only

Stainless steel frame with powder coated finish

Optional integral vinyl headrest

Folds away to save space

Colour

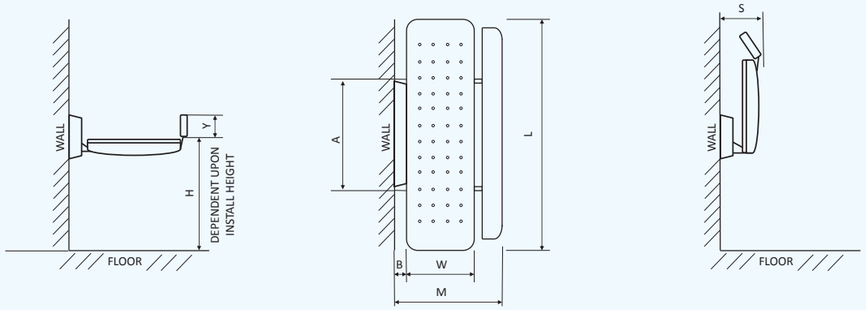

Stainless Steel Powder Coated		Size	Table Dimensions			Travel Range	Wall Frame Width	Wall Frame Depth	Safety Guard Height	Stored Width	Stored Width inc drip tray**	Max User Weight	Product Weight
Without Head-rest	With Head-rest		L mm	W mm	M mm	H mm	A mm	B mm	Y mm	S mm	Smm	kg	kg
3171	3271	1	1400	650	1000	Fixed	665	80	145*	240	340	200	75
3172	3272	2	1500	650	1000	Fixed	665	80	145*	240	340	200	76
3173	3273	3	1600	650	1000	Fixed	665	80	145*	240	340	200	77
3174	3274	4	1700	650	1000	Fixed	665	80	145*	240	340	200	78
3175	3275	5	1800	650	1000	Fixed	665	80	145*	240	340	200	79
3176	3276	6	1900	650	1000	Fixed	665	80	145*	240	340	200	80

**optional accessory
All technical data and drawings available upon request.

shower stretcher adjustable

Height adjustable

The Shower Stretcher Adjustable Height allows you to manually set the height of the stretcher to the desired position, simply by turning the handle clockwise to lower and anti-clockwise to elevate.

Wall mounted

The Shower Stretcher Adjustable Height is wall mounted and does not require fixing to the floor. Its stainless steel frame and vinyl cover makes it perfect for any room environment.

Space saver

The Shower Stretcher Adjustable Height is ideal for rooms that have limited space. The fold-away functionality of the stretcher allows it to be stored away when it is not being used, allowing maximum use of room space.

Technical data

- No floor fixing required
- Weight capacity of 200kg
- Travel range of 350mm
- Height range is manually operated

perfect for any room environment and for rooms with limited space

Standard key features

Height range is manually operated

Stainless steel frame with powder coated finish

Optional integral vinyl headrest

Folds away to save space

Colour

☐

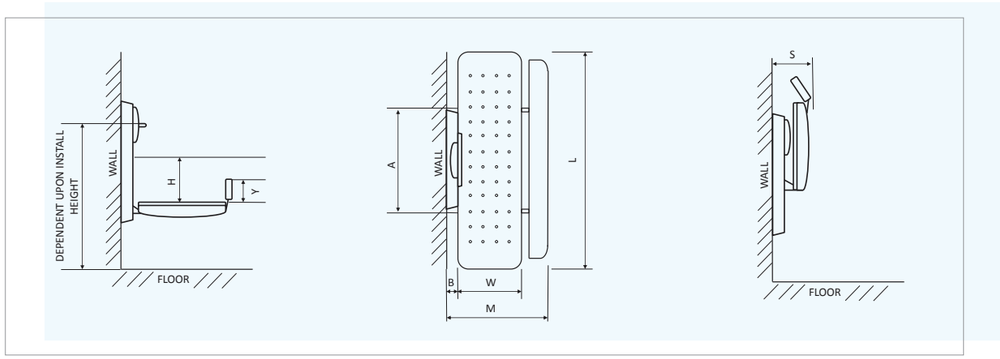

Stainless Steel Powder Coated		Size	Table Dimensions			Travel Range	Wall Frame Width	Wall Frame Depth	Safety Guard Height	Stored Width inc drip tray**	Stored Width	Max User Weight	Product Weight
Without Head-rest	With Head-rest		L mm	W mm	M mm	H mm	A mm	B mm	Y mm	S mm	S mm	kg	kg
3181	3281	1	1400	650	1000	450 - 800*	665	80	145**	380	240	200	80
3182	3282	2	1500	650	1000	450 - 800*	665	80	145**	380	240	200	81
3183	3283	3	1600	650	1000	450 - 800*	665	80	145**	380	240	200	82
3184	3284	4	1700	650	1000	450 - 800*	665	80	145**	380	240	200	83
3185	3285	5	1800	650	1000	450 - 800*	665	80	145**	380	240	200	84
3186	3286	6	1900	650	1000	450 - 800*	665	80	145**	380	240	200	85

*depending on installed height **safety guard is optional accessory
All technical data and drawings available upon request.

hi-riser

robust structure and slimline design with an impressive travel range of 600mm and available in 7 sizes

Robust yet slimlime

Hi-Riser is an electrically operated wall-mounted changing table that is suitable for children and adults of up to 200kg. Despite its robust structure, the Hi-Riser has a slimline design that ensures it fits easily into most environments.

Easy transfers

The Hi-Riser has been designed so that it can be used with most mobile or ceiling hoists. The unique safety side rail stows away, streamlining access for transfers from a wheelchair, shower and toileting chair. The Hi-Riser also benefits from an impressive travel range of 600mm.

Providing options

We understand that every need is different, which is why the Hi-riser comes in seven different sizes that cater from young children through to adults. The Hi-Riser comes in a cream powder coated frame for dry environments or stainless steel frame for damp environments.

Technical data

- Electrically operated
- Wall and floor mounted
- Wall mounting kit included
- Weight capacity of 200kg
- Impressive travel range of 600mm

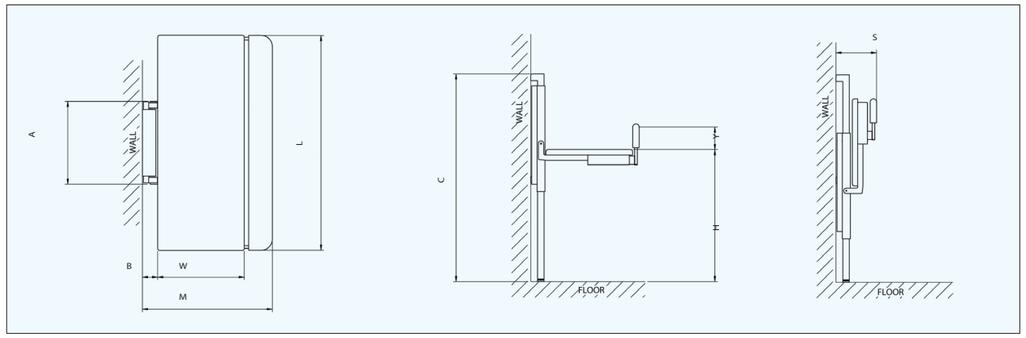

Standard key features

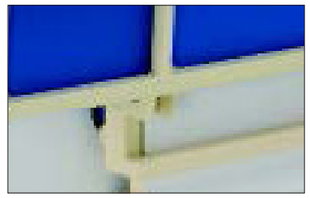

Cream powder coated for dry room environments

Stainless steel for damp room environments

Stowaway side rail

Folds away to save space

Mild Steel Powder Coated	Stainless Steel	Size	Table Dimensions L mm	W mm	M mm	Travel Range H mm	Wall Frame Width A mm	Wall Frame Depth B mm	Wall Frame Height C mm	Safety Side Height Y mm	Stored Width S mm	Max User Weight kg	Product Weight kg
3041	3051	1	1200	550	875	400 - 1000	700	110	1550	165	305	200	80
3042	3052	2	1300	550	875	400 - 1000	700	110	1550	165	305	200	82
3043	3053	3	1400	600	925	400 - 1000	700	110	1550	165	305	200	84
3044	3054	4	1500	600	925	400 - 1000	700	110	1550	165	305	200	86
3045	3055	5	1600	650	975	400 - 1000	700	110	1550	165	305	200	88
3046	3056	6	1700	650	975	400 - 1000	700	110	1550	165	305	200	90
3047	3057	7	1800	650	975	400 - 1000	700	110	1550	165	305	200	92

Colour Ranges
See page 24 for colour options

All technical data and drawings available upon request.

hi-riser shower stretcher

highly supportive yet soft and comfortable for children and adults up to 150kg

Two in one

The Hi-Riser shower stretcher is an easy to use two-in-one wall and floor mounted showering and changing table. Its robust yet slimline design makes it suitable for children and adults of up to 150kg. Its versatility means it offers the ideal solution for swimming, hydrotherapy and bathroom environments.

Comfortable & hygienic

The Hi-Riser Shower Stretcher has been designed with reinforced PVC, making it highly supportive yet soft and comfortable to lie on. Its stainless steel frame facilitates easy cleaning, making it a perfect choice for multi-user environments.

Technical data

- Handset works safely in wet room environments
- Drainage pipe & fasteners included
- Wall and floor mounted
- Weight capacity of 150kg
- Travel range of 570mm
- Protrudes 300mm from the wall when stored

easi-change

Quick drainage

The Hi-Riser Shower Stretcher is supplied with flexible pipe work to use with a suitable floor drain or, alternatively, it can be plumbed in. Water can easily be drained away using the drainage pipe, which can also be detached for cleaning purposes.

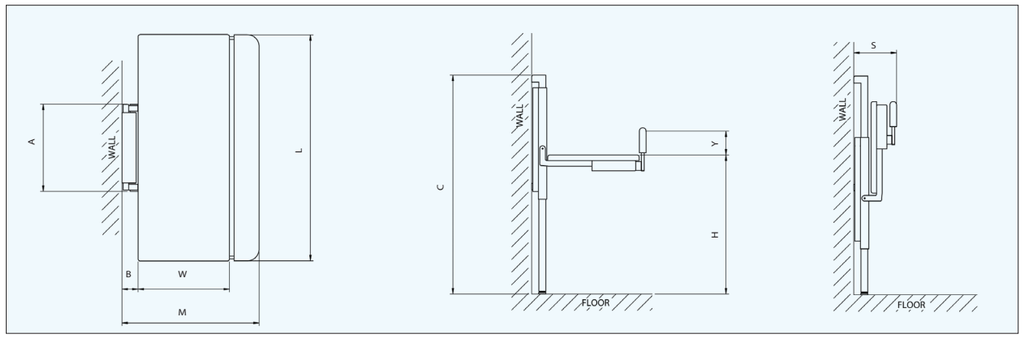

Standard key features

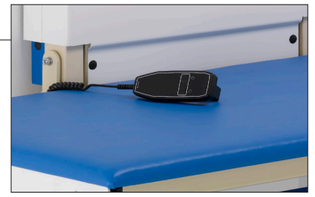

Electrically operated

Folds away to save space

Folding side rail

Drainage apron, pipe & fasteners

Colour

Stainless Steel	Size	Table Dimensions			Travel Range	Wall Frame Width	Wall Frame Depth	Wall Frame Height	Safety Side Height	Stored Width	Max User Weight	Product Weight
		L mm	W mm	M mm	H mm	A mm	B mm	C mm	Y mm	S mm	kg	kg
3063	1	1400	650	1110	390 - 960	700	110	1550	165	300	150	80
3067	2	1800	650	1110	390 - 960	700	110	1550	165	300	150	85

All technical data and drawings available upon request.

mobi changer

fully mobile changing table that requires no installation, an extremely cost effective option

Room to room

The Mobi Changer is a fully mobile changing table that requires no installation or fixing. Its compact and slimline design means it can be easily manoeuvred from room to room, offering an extremely cost effective option for multi-transfer or multi-user environments.

Height adjustable

The electrically operated Mobi Changer provides an excellent travel range of 480mm and can be lowered and elevated at the touch of a button. Safe and suitable working heights can be easily achieved which helps prevent the risk of back injury to the carer.

Easy transfers

The Mobi Changer has been designed to ensure sufficient clearance for a wide number of hoists. Its mobility and unique stowaway side rails enable safe and easy handling. Whether you are transferring from a bed, wheelchair or toileting chair, the Mobi Changer is the perfect solution.

Technical data

- Cream powder coated frame for dry rooms
- Stainless steel for damp room environments
- Weight capacity of 227kg
- Travel range of 480mm
- Comes with a wall mounted charger and 2 batteries

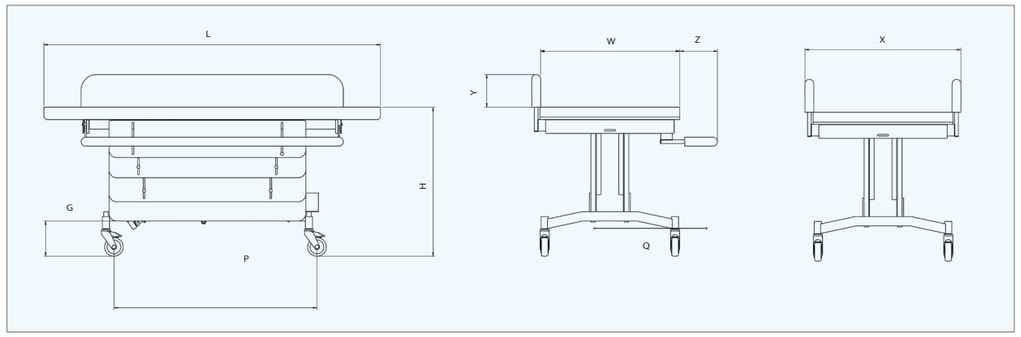

buy online

Standard key features

Optional angled back

Easy to clean padded surfaces

Stowaway side rails

Mobile and easy to manoeuvre

Mild Steel Powder Coated	Stain-less Steel	Size	Table Dimensions		Travel Range	Safety Sides		Safety Sides Op-erational Space	Castor Centres		Nominal Clear-ances	Max User Weight	Product Weight
			L mm	W mm	H mm	Width X mm	Height Y mm	Z mm	P mm	Q mm	G mm	kg	kg
3121	3141	1	1400	750	470 - 950	840	165	200	1090	700	190	227	86
3122	3142	2	1600	750	470 - 950	840	165	200	1090	700	190	227	88
3123	3143	3	1800	750	470 - 950	840	165	200	1090	700	190	227	90
3124	3144	4	2000	750	470 - 950	840	165	200	1090	700	190	227	100

Further technical data and drawings available on our website.

Colour Ranges
See page 24 for colour options

mobi heavy duty changer

designed to meet the needs of bariatric users, includes an powerful motor and extra wide mattress

Meeting bariatric needs

The Mobi Heavy Duty Changer has been designed to meet the needs of bariatric users. Its powerful 12K Newton motor, coupled with the extra wide mattress platform, makes it the ideal solution.

Manoeuvrability

The benefit of the Mobi range of products is that they do not require any wall mounting or floor fixing. They are easy to manoeuvre which means that the user can be transported from room to room with no trouble (door opening has to be 1100mm or more).

Height adjustable

The Mobi Heavy Duty Changer is electronically operated, which makes adjusting the height of the table simple, this is beneficial for both the carer and user.

Technical data

- No installation required
- Electronically operated
- Dry room environments only
- Weight capacity of 500kg
- Travel range of 370mm
- Wall mounted charger and 2 batteries

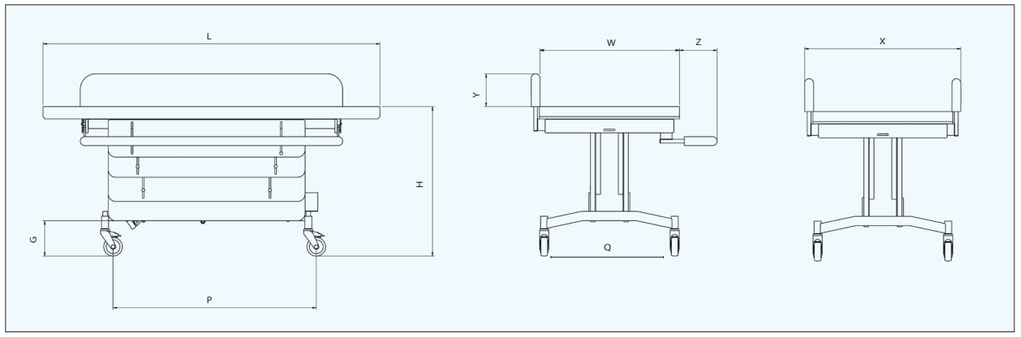

Standard key features

Travel range of 370mm

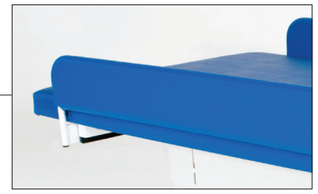

Stowaway side rails

Electronically operated

Mobile and easy to manoeuvre

Mild Steel Powder Coated	Size	Table Dimensions		Travel Range	Safety Sides		Safety Sides Operational Space	Castor Centres		Nominal Clearances	Max User Weight	Product Weight
		L mm	W mm	H mm	Width X mm	Height Y mm	Z mm	P mm	Q mm	G mm	kg	kg
3161	1	2000	960	550 - 920	1050	165	200	1500	800	150	500	100

Further technical data and drawings available upon request.

Colour Ranges
See page 24 for colour options

mobi shower trolley

a powered, height adjustable shower trolley and has two safety side rails for safety and confident showering

Safe showering

For many children and adults, conventional methods of bathing and showering can be difficult and even hazardous. The Mobi Shower Trolley is a powered, height-adjustable shower trolley specifically designed to enable the user to be safely and easily washed or showered by their carer.

Reduces back injury

The Mobi Shower Trolley offers a range of height adjustments to enable the carer to shower and change the user at a safe and suitable working height. This reduces the risk of back injury for the carer.

Stowaway side rails

The Mobi Shower Trolley has been designed with two unique safety side rails that can be easily stowed away beneath the trolley. This allows maximum clearance for safe, easy transfer and use.

Technical data

- No installation required
- Length of table is 1800mm
- Weight capacity of 220kg
- Travel range of 460mm

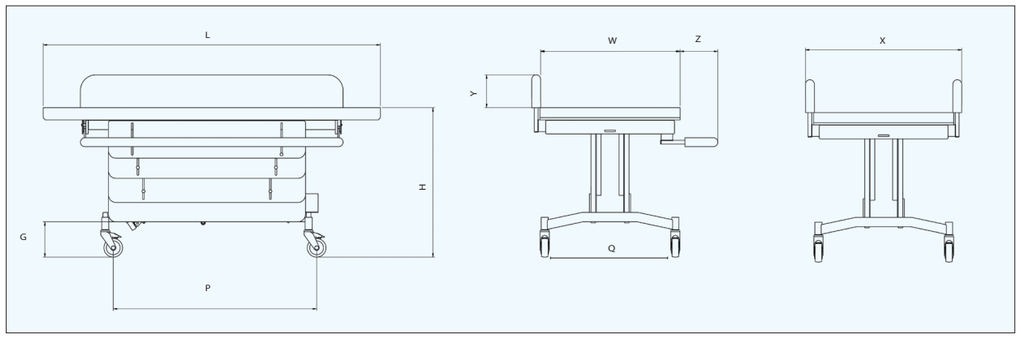

Standard key features

Travel range of 370mm

Wedge shaped pillow

Drainage panel and pipe

Mobile and easy to manoeuvre

Colour

Stain-less Steel	Size	Table Dimensions		Travel Range	Safety Sides		Safety Sides Operational Space	Castor Centres		Nominal Clearances	Max User Weight	Product Weight
		L mm	W mm	H mm	Width X mm	Height Y mm	Z mm	P mm	Q mm	G mm	kg	kg
3151	1	1800	750	465 - 925	840	195	200	1090	700	190	220	86

Further technical data and drawings available upon request.

changing & showering

optional accessories

Headrest

CODE Please refer to product

Our 3 shower stretcher products can all be enhanced with the optional integral vinyl headrest. The headrest must be ordered at the same time the stretcher is ordered and cannot be fitted retrospectively. Our frames have been designed with the ability to have the headrest at each end of the stretcher (please specify which end, at point of order). The headrest features a paddle lift adjustment, which allows it to be locked securely in the desired position.

Relevant products:
Easi-Lift Shower Stretcher, Shower Stretcher Fixed Height & Shower Stretcher Adjustable Height

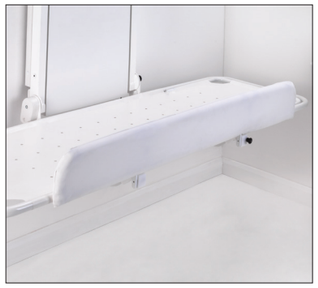

Safety guard

CODE ECSG01

Enhance the safety of any of the 3 shower stretcher products with the safety guard accessory. The safety guard must be ordered at the same time the stretcher is ordered and cannot be fitted retrospectively. The safety guard locks securely into position and provides extra support whilst the user is on the stretcher. Please note that the safety guard does not stow away (as per the Mobi changer). The safety guard is one size in length (1400mm).

Relevant products:
Easi-Lift Shower Stretcher, Shower Stretcher Fixed Height & Shower Stretcher Adjustable Height

Angled back

CODE BE002 (size 1), BE003 (size 2) and BE004 (size 3)

The angled back is only available for the powder coated Mobi changer and must be requested when placing an order, as it cannot be fitted retrospectively.

Additional charging station & battery

CODE CB008 (charger & battery)
CODE BE005 (battery only)

Relevant products:
Mobi Changer

Summary of product suitability depending on room environment

Environment	Suitable Products
Dry room environment	Powder coated benches (PC mobi, easi-lift & hi-riser)
Damp room environment i.e. bath/changing rooms (not for use with direct water)	Stainless steel benches (SS mobi & ss hi-riser)
Wet room environment i.e. walk in shower	Shower trollies, easi-lift shower strectcher & hi-riser shower stretcher

Samba pictured with hoist, showing suitability for hoist transfers

seating standing toileting bathing changing showering
desks tables sleeping therapy sensory moving handling

colours

Moxxa range - brushed/soft finish smooth vinyl

raspberry	grey	blue
orange	red	black

Moxxa range can be used on most products

Just Colour range - vinyl

ocean blue	rouge	gingersnap	marigold	eden
cobalt	candy pink	cool blue	cherry blossom	lilac
sea green	citrus green	greyfriar	jasmine white	

Just Colour range can be used on most products

Colours are a guide only and may vary due to limitations of the print process. Material samples are available upon request. Colour range may change without prior notice, we try to colour match where possible.

smirthwaite
Together we transform lives

always here to help

UK Contact Details:

telephone
+44 (0)1626 835552

email
info@smirthwaite.co.uk

website
www.smirthwaite.co.uk

Smirthwaite Ltd

16 Wentworth Road, Heathfield,
Newton Abbot, Devon TQ12 6TL

MADE IN BRITAIN®

APPROVED CODE TRADINGSTANDARDS.GOV.UK

Smirthwaite reserves the right to modify product specifications at anytime without prior notification. All measurements are approximations and can vary depending on the wood and materials used. All details shown are correct at time of print. Smirthwaite® is a registered trade mark of Smirthwaite Limited.